Drayton

MiStat™ Programmable
Room Thermostat

Model: P710R

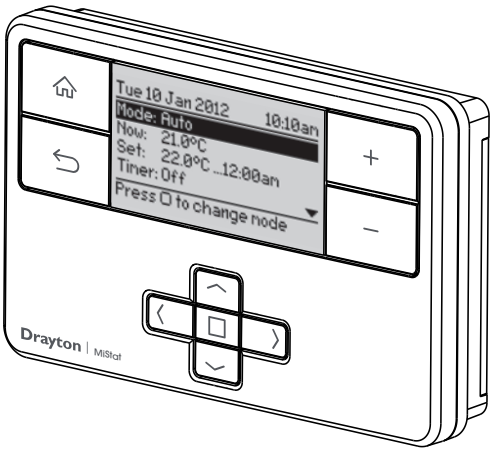

Invensys

Customer Service Tel: 0845 130 5522
Customer Service Fax: 0845 130 0622
Technical Helpline: 0845 130 7722
Website: www.draytoncontrols.co.uk
E-mail: customer.care@invensys.com

@DraytonControls
/DraytonControls

EU Design Regs:- 002180638-1/2/3
Installation Guide 06490189001 Iss D

INSTALLATION Guide

Applications

The electronic room thermostat MiStat P can be used for temperature control together with:

- Boilers
- Oil and gas warm water heating
- Actuators of floor heating systems or radiators
- Circulating pumps
- Heat pumps

A MiStat R receiver is required for operation.

Note: To ensure a properly working heating system, the menu items in the Installer settings have to be set according to the needs of the heating system, see step 5.

Caution!

The radio receiver may be installed only by a competent electrician in compliance with the circuit diagram enclosed in the top housing cover or in compliance with these instructions. The current safety regulations must be observed.

In order to achieve protection class II, adequate installation measures must be taken.

This radio receiver, which can be installed separately, is designed exclusively for temperature control in dry and closed rooms and standard environments. This electronic device was created according EN60730-1, it operates according working principle 1C.

Step 1: Mounting the Wall-plate

⚠ IMPORTANT:

Installation must only be carried out by a qualified electrician or heating engineer.

Make sure mains input has a 3 amp fuse.

⚠ CAUTION! Before installation, make sure the mains supply is switched off!

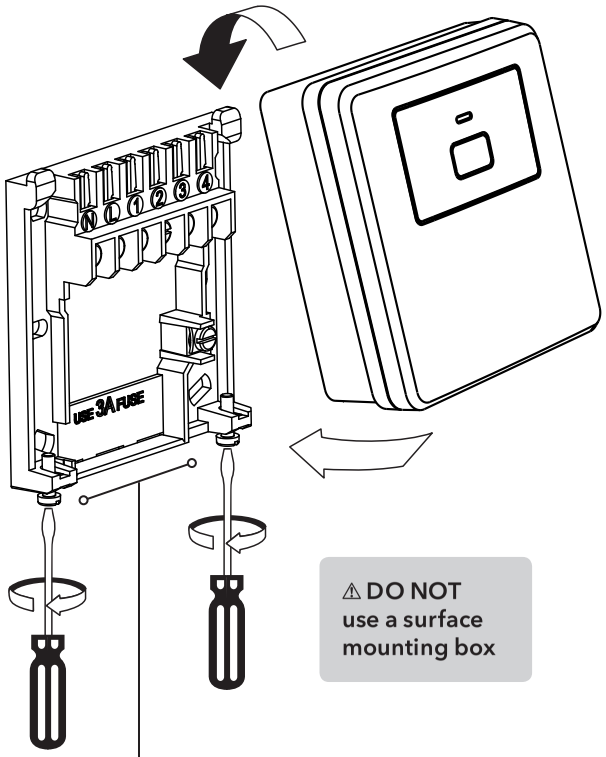

⚠ DO NOT use a surface mounting box

Option 1: Fitting a new wall-plate

The ideal location is close to the boiler or central heating system. For the best performance install in an open space, at least 30cm distance from any metal objects including wall boxes and the boiler housing. It is recommended that the MiStat R is mounted on the wall nearest the final location of the MiStat P room unit and not less than 30cm from the boiler side panel.

Loosen the securing screws, remove the wallplate and, if surface wiring is to be used, snap out the cable entry strip on the bottom edge of the wallplate with a pair of pliers. Fix the wallplate, terminals at the top, either direct onto the flat wall using wall plugs and no 6 x1" wood screws or on a plastic flush mounting single conduit box using M3.5 x 14 screws. Check that there's 20mm clearance to the right of the wall-plate and 25mm above it. Complete the wiring to the MiStat R wallplate in accordance with the wiring diagram in step 2, to comply with current IEE regulations. Place the MiStat R onto the wallplate and tighten the securing screws.

Check the 3A fuse, and switch on the mains.

Warning: Installing the MiStat R too close to the metal side panel or mains cables may interfere with the radio signal.

Option 2: Using an existing wall-plate

Loosen the securing screws on the old receiver and unplug it. Check that there's 20mm clearance to the right of the wall-plate and 25mm above it. Check the wiring diagram for your product model to compare terminals and, if necessary, change the wiring of the wall-plate to suit. Now plug the MiStat R unit into the wall-plate and tighten the securing screws.

Check the 3A fuse, and switch on the mains.

Step 2: Wiring

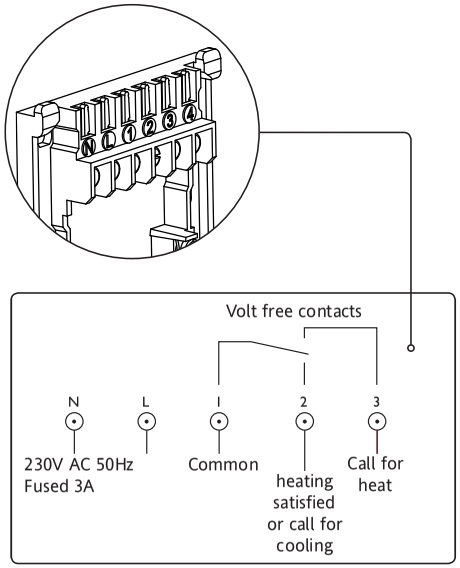

This product is double insulated and does not require an earth connection. The MiStat R should be wired to the boiler or central heating wiring using the correct type of cable or flex. The MiStat R should be wired to replace hard wired room or programmable thermostats, as shown on the system or boiler wiring diagrams.

Always check other manufacturers instructions for compatibility.

Combi boiler basic wiring layout

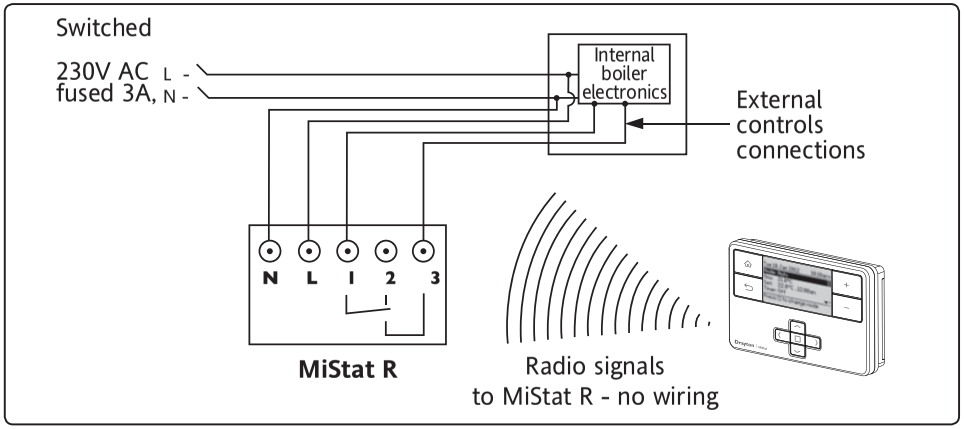

Zone control basic wiring layout

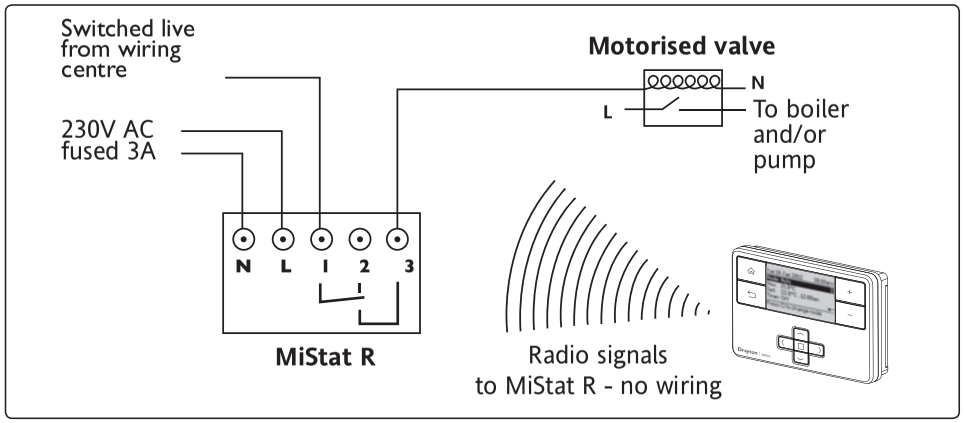

Step 3: Signal Strength

The MiStat Programmable Room thermostat is pre-bound to the MiStat receiver in the factory so they just need to be positioned in the best place for wireless communication.

To help with this there is a built in Signal strength indicator as shown below (see also Step 5 Installer settings).

It is recommended that the signal strength is 'Good' or 'Very Good' to ensure ongoing communication is maintained.

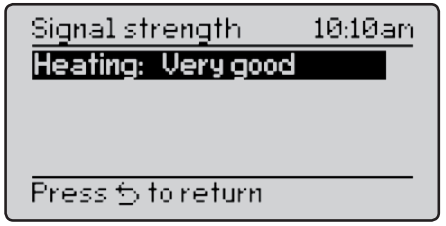

If 'Poor' is displayed, look for a better location.
If 'No Signal' is displayed, try connecting again with the room unit in a different position.

Note: If not bound, the bind screen will be visible.

For commissioning see Step 6

Step 4: Mounting Options →

Once the best position has been identified, the MiStat should be fixed to the wall using the wall bracket as shown.

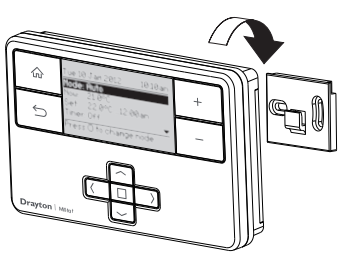

Care should be taken to mount the thermostat in a position which is not subject to direct sunlight or draughts. Preferably it should be mounted on an inside wall about 1.2m (4ft) above the floor in a position where it can respond to room temperature but away from the direct influence of radiators or other appliances giving off heat.

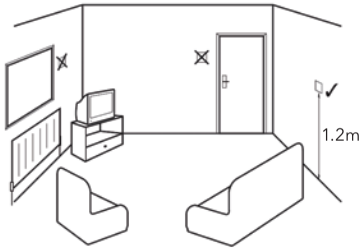

NB. MiStat can also be positioned using the table stand included.

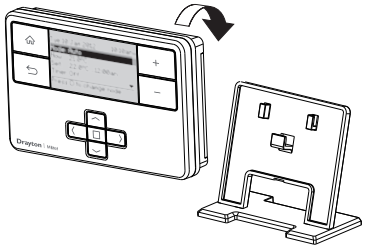

It has to be placed in a location where it will be able to control the room temperature.

Step 5: Installer Settings

Customise the controller according to application requirements (from installer only)

From the Home screen, select **Settings**, then **Installer settings** as shown.

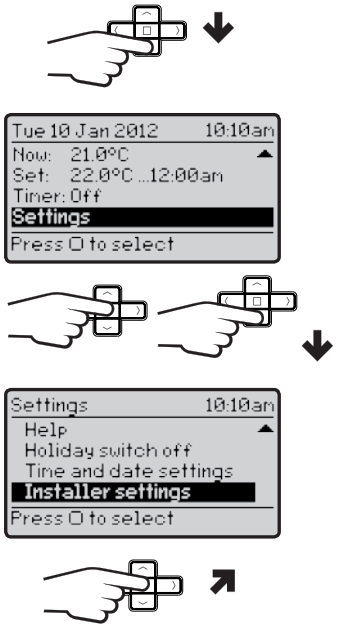

From here you can edit the assigned zones, rename them if required and adjust the Service settings.

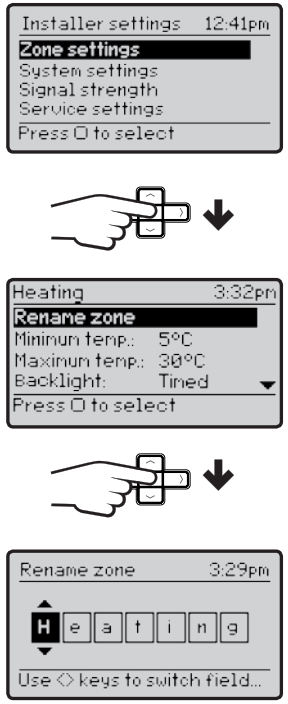

If using the Service feature, remember to set the **Password** when complete.

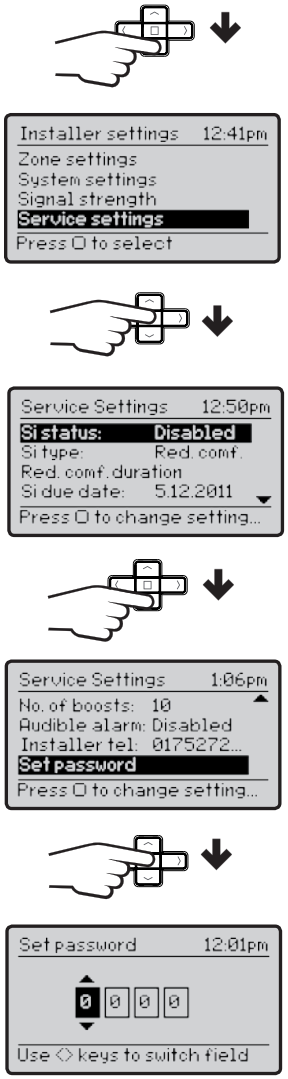

Technical Data

MiStat P721R & MiStat R111M	
Supply voltage	MiStat P: 2 x AA 1,5V alkaline batteries MiStat R: 230V
Switch rating	MiStat R: 2(1)A 230V a.c.
Ambient temperature	Operating: 0°C to 45°C; Storage: -20°C to 55°C;
Battery life	MiStat P: 2 years (typically)
Temperature range	5°C to 30°C
Temperature resolution	0.5 °C, display and setting
Control accuracy	<0.6°C at 4°/hour
Wiring	MiStat R: Fixed wiring only, to comply with current IEE regulations (BS7671) MiStat P: No wiring required
Mounting	MiStat R: Industry standard wallplate MiStat P: Wall bracket or table stand
Radio frequency	868.3MHz (Bi-directional communication)
Radio signal range	30m typically. The range may be affected by the composition / density and number of walls between the MiStat P and MiStat R
Pollution degree	2
Software class	A
Rated impulse voltage	MiStat R: 2.5kV
Ball pressure test temperature	MiStat R: 75°C
Relevant EC Directives:	2006/95/EC Low Voltage Directive 2004/108/EC Electromagnetic Compatibility Directive 1995/5/EC R&TTE Directive 2006/66/EC Battery Directive 2011/65/EU RoHS Directive
Applied Standards:	EN60730-1; EN60730-2-7; EN60730-2-9 ETSI EN 300 220-3; ETSI EN 301 489-3

Step 5: Installer Settings (continued) ➔

Feature:	Description:	Factory Pre-Set:
Installer settings	⚠ **CAUTION!** These settings should only be set-up by a qualified person. They can influence safety and the proper functioning of the system.	
Zone settings	Customise the MiStat according to personal requirements	
Rename zone	To rename an existing zone	Heating
Minimum temp	It will not be possible to set a lower temperature	5°C
Maximum temp	It will not be possible to set a higher temperature	30°C
Backlight	Available options are: On with timeout, Always Off	On with timeout
Powersave	To reduce power use when not being adjusted. Available options are: Partial display with key data, no display until button press.	Partial display
Temp. offset	Adjust the displayed temperature to personal needs	0.0°C
Screen lock	Enable or disable the lock in the room unit. To Lock: Enter a 3 digit code for protection To Unlock: Enter the 3 digit code **User Code:**	Disabled Master Code 401
RF binding	Bind the remote thermostat to the receiver.	Pre-bound
System settings	Customise the MiStat according to system requirements	
Control type	Select TPI, TP or On/Off	TPI
Cycle rate (only when Control type is TPI or TP)	Select 6 (Gas) cph (cycles per hour), 12 (Electric) cph or 3 (Oil) cph	6 cph
Min on/off (only when Control type is On/off)	Select 1 to 30 minutes (The minimum duration for the relay to be On or Off)	5 min.
Hysteresis (only when Control type is On/off)	Select Off, 0.1 to 5° (Off = No temperature hysteresis, even on very low temp. changes, the relay will switch over according to Min On/Off time)	0.5°C
Frost protection	Enable or disable the Frost protection in the MiStat unit. (Temperature = 5°C)	Disabled
Valve protection	The output will be activated for the specified time (in minutes). This will happen weekly, related to the last actuation of the output. Select 0 to 10 minutes.	0 minutes (Off)
Optimum/Delayed start	Available options are: Off, Optimum, Delayed	Off
System reset	Will reset all settings to factory pre-sets	
View product information	View the product details, e.g. Part number, Firmware revision etc.	
Signal strength	Informs about the current signal strength, see step 3.	
Service settings	To help comply with regulation 36 of the Gas safety [Installation & Use] regulations 1998. On expiry of the warning period, the alarm sounds, starting at midday and continuing until a button is pressed. This is repeated daily until the service function is reset. To enter these settings a code is requested.	
Si status	Enable or disable Service mode	Disabled
Si type	Select between, Reduced comfort, Switched off & No effect (warnings only)	Reduced Comfort
Reduced comfort duration	Set the duration for the reduced comfort setting (0 to 60mins.)	15 min.
Si due date	Set the date the next boiler service is due	Today
Warning start	Set the number of days for the on-screen service due warning (0 to 60 days)	30 days
Boost status	Enable or disable Service Boost	Disabled
No. of boosts	Set the number of Boosts to be available after service is due (1 to 99)	10
Audible alarm	Enable or disable Service Alarm	Enabled
Installer tel.	Enter the Installer telephone number if required	
Set password	Set password to restrict access to the Service settings	0000

Step 6: Commissioning

Note: Only needed if not already bound, ie if replacing either the MiStat thermostat or the MiStat receiver.

1. Turn on power for the receiver. The red LED will come on.
   If LED is green or Off, the device is already bound, no further action needed here (If a separate programmer/Timer is fitted, ensure that it is switched on)
2. Push the button for >5 Seconds and the LED will flash red – yellow – green --- -red – yellow - green…
3. Enter binding mode on the corresponding MiStat room unit, see Step 5: Installer settings
   Important: It is essential, that the binding is carried out between the corresponding room unit and the receiver
4. The possible results are as follows;
   1.'✓ Bind OK' will be indicated on the MiStat room unit if binding was successful.
   After a few seconds the Signal strength will be indicated on both the MiStat room unit and the MiStat receiver, see below.
   2. '✕ Bind Failed' will be displayed if unsuccessful.
   3. If 'Poor' signal is displayed, look for a better location.
   4. If 'No Signal' is displayed, try connecting again with the room unit in a different position.

MiStat Room Unit

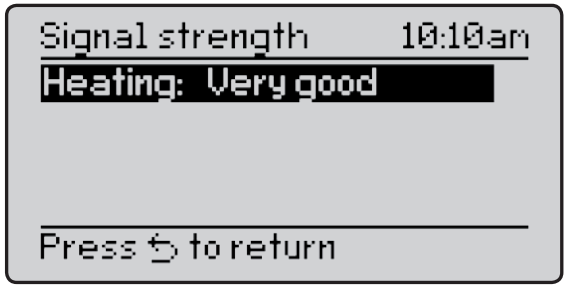

MiStat Receiver

Immediately after binding, these signals will indicate the signal quality for 1 minute.

- three green flashes = Very good signal
- double amber flashes = Good signal
- single red flashes = Poor signal
- steady red = No signal

To check the wireless connection
A green LED on the receiver will indicate a good RF connection.

Installer Notes: