N2 CSHXDIV C

1901 Shower Range

1901 Exposed Concentric Chrome Shower Valve with Diverter and Rigid Riser Kit

Specification

Finish/Colour:	Chrome Plated
Main Construction Material:	Brass
No of Controls:	3
Shower Type:	Exposed Concentric
Shower Head Type:	Both
Shower Kit:	Rigid Riser with Diverter
Valve/Cartridge Type:	Concentric Thermostatic Cartridge
Maximum Hot Water Supply Temperature °C:	65
Maximum Static Pressure: (bar)	10
Plumbing System Suitability:	All, preferably balanced
Minimum Dynamic Pressure:	0.2 bar
Connection Inlet:	15mm Compression Connections
Connection Outlet:	G 1/2"
Isolation Valve Included:	No
Check Valve Included:	Yes

Features:

- The 1901 Exposed Thermostatic Shower Valve and Handset in chrome bring Edwardian-inspired design together with dependable performance. Family-safe temperature control and eco-conscious flow regulation ensure comfort and reliability with every use.
- Enjoy peace of mind with a 42°C safety stop, including override when required
- Save time and avoid plumbing changes with a shower that fits your existing pipework, thanks to adjustable inlets for centres between 136mm and 158mm.
- Comes complete with diverter, shower rose, rigid riser and handset
- Built to last, backed by a lifetime parts and 1-year labour guarantee

Dimensions (measurements in mm)

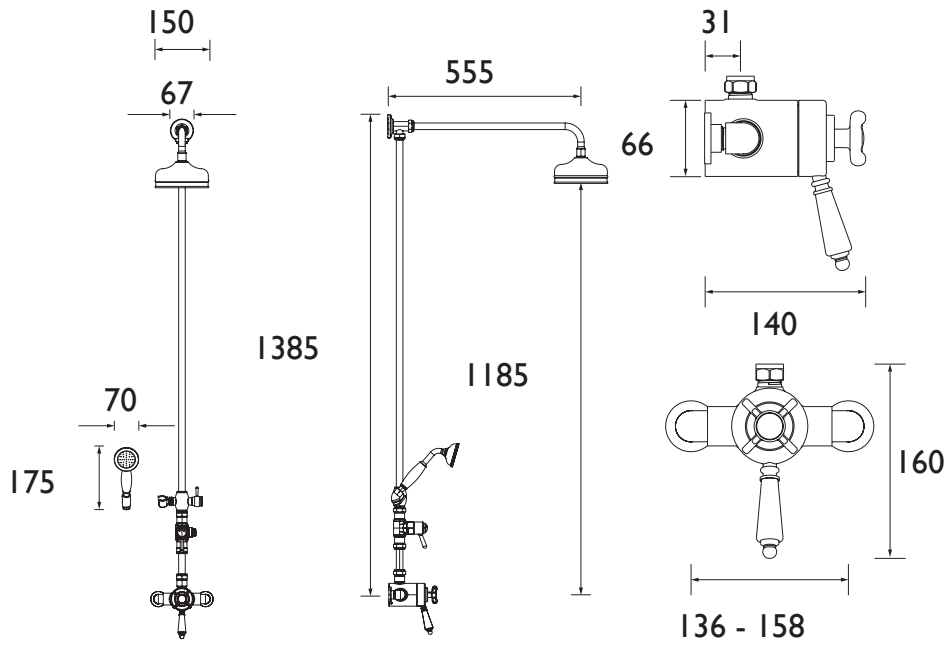

Product Certifications:

WRAS APPROVED PRODUCT

WRAS Certificate No: 2207907
WRAS Expiry Date: 31/07/2027

Unified Water Label 11.6 l/min

Flow Rates (l/min)

System Pressure (bar)	0.2	0.5	1	2	3	5
Fixed Head	5.6	10	15.8	22.9	24.5	31.6
Fixed Head (Flow Limiter)	NPD	9	10.9	11.3	11.6	9.7
Handset	3.9	7.2	10.9	15.6	17.6	22.7
Handset (Flow Limiter)	NPD	6.8	9.9	10.8	11.3	9.9

TECHNICAL DATA SHEET

LIFETIME GUARANTEE *

BRISTAN

D8

Bristan, Birch Coppice Business Park, Dordon, Tamworth, B78 1SG. Web Site: www.bristan.com Telephone: 0330 026 6273. Email: enquire@bristan.com.

* **- Lifetime guarantee applies to products purchased on or after 01/04/2026.** See www.bristan.com/guarantees for more information. The information contained on this page was correct at date of issue. Listed flow rates are indicative for the product. Different plumbing systems and flow regulators can produce higher or lower results. Fitting Dimensions are provided as a guide only. Some variation may occur due to manufacturing tolerances. Bristan pursues a policy of continuous improvement in design and performance of its products and so reserves the right to change specifications without prior notice.